RoHS REACH compliant

REVISION DATA				
SYM	REV	DESCRIPTION	DATE	APPR.
	00	new part	08.03.18	AT

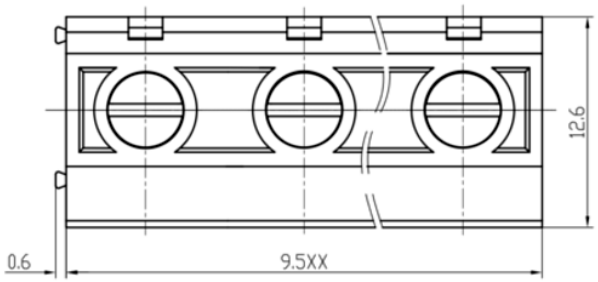

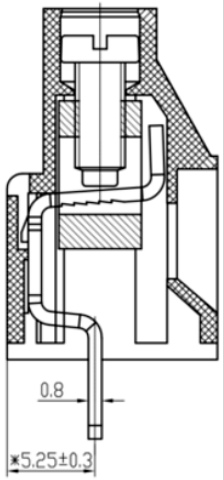

SECTION A-A

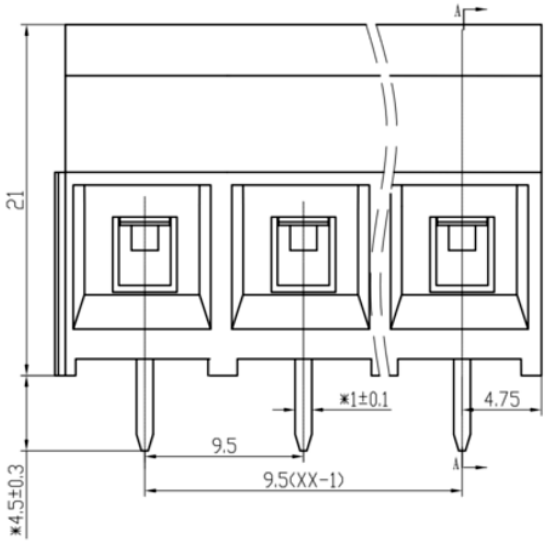

Technical Specifications

Material

Screws:	M3.0 Steel Zn plated
Cage:	Brass, Ni plated
Pin header:	Brass, Sn plated
Housing:	PA66, UL94V-0

Electrical

	UL	IEC
Rated voltage:	300V	450V
Rated current:	30A	32A
Wire range:	26-10AWG	4.0mm²
Contact resistance:	20mΩ	
Insulation resistance:	500MΩ/DC500V	
Withstanding voltage:	AC2000V/1Min	

Mechanical

Temperature:	-40°C to +105°C
Max. soldering:	+250°C/5 sec
Torque:	0.5Nm/4.43Lbin
Strip length:	6-7mm

order information

N95002	-	xx	xx	xx	-	xx
		No. of Positions	Colour	Packing		Special Customer
		02~24	10=Green	A= bag		
			xx= on request	BO= Box		
				xx= on request		

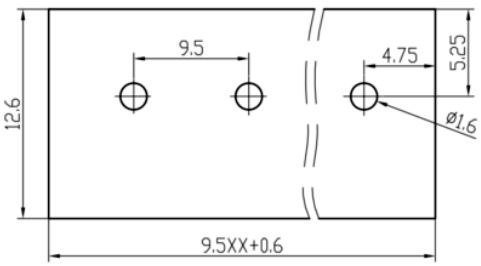

P.C.B. LAYOUT

	linear dimension(Tolerances Standard GB/T 14486-2008)															
variable range	to 6	over 6 to 10	over 10 to 18	over 18 to 30	over 30 to 50	over 50 to 80	over 80 to 120	over 120 to 160	over 160 to 200	over 200 to 250	over 250 to	all	to 5	over 5 to 30	over 30 to 120	over 120 to
tolerance	±0.1	±0.14	±0.19	±0.25	±0.32	±0.43	±0.57	±0.72	±0.88	±1.05	±1.25	0.5	0.025	0.06	0.12	0.4

BRCONNECTORS

PCB Print Clamp

PROJECTON		Allgemeintoleranz ISO 2768-m	
DATE	08.03.2018	Customer Drawing- No.:	
DRAWN	AT	Drawing- No.: 2161771	
CHECKED	MR		
APPROVED	BR	UNIT: mm	SCALE: / SIZE: A4

Diese Zeichnung ist ausdrücklich Eigentum der BR-connectors GmbH. Ohne vorherige Zustimmung seitens der BR-connectors GmbH darf diese nicht vervielfältigt, noch an Dritte zugänglich gemacht werden.
Wir behalten uns alle Rechte vor, auch im Falle einer Patentierung nach Gebrauchsmusterprüfung.