RoHS REACH compliant

REVISION DATA				
SYM	REV	DESCRIPTION	DATE	APPR.
	00	new part	13.03.18	AT

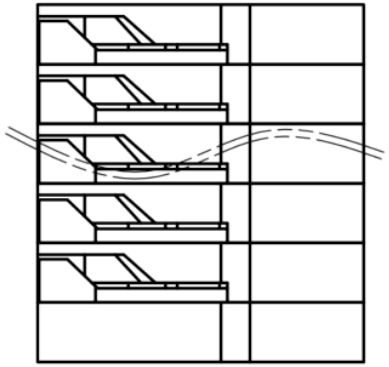

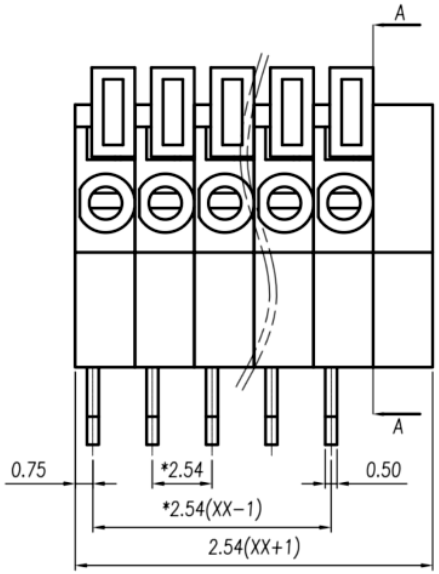

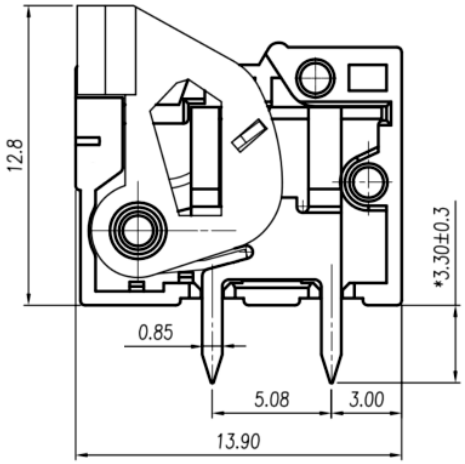

SECTION:A−A

Technical Specifications

Material

Pin header:	Brass, Sn plated
Housing:	PA66, UL94V-0
Shrapnel:	Stainless Steel

Electrical

	ULB	IEC
Rated voltage:	150V	130V
Rated current:	2A	6A
Wire range:	26-20AWG	0.5mm²
Contact resistance:	20mΩ	
Insulation resistance:	500MΩ/DC500V	
Withstanding voltage:	AC1300V/1Min	

Mechanical

Temp. Range:	-40°C to +105°C
Max. soldering:	+250°C/5 sec
Strip length:	11mm

order information

R25408	-	xx	xx	xx	-	xx
		No. of Positions	Colour	Packing		Special Customer
		01~XXp	10=Green	A= bag		
			xx= on request	BO= Box		
				xx= on request		

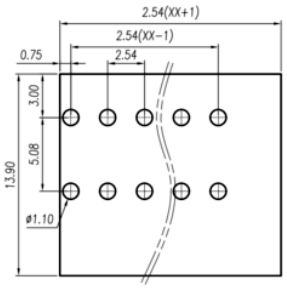

P.C.B. LAYOUT

	linear dimension(Tolerances Standard GB/T 14486−2008)												—	▱	//	⊥
variable range	to 6	over 6 to 10	over 10 to 18	over 18 to 30	over 30 to 50	over 50 to 80	over 80 to 120	over 120 to 160	over 160 to 200	over 200 to 250	over 250 to	all	to 5	over 5 to 30	over 30 to 120	over 120 to
tolerance	±0.1	±0.14	±0.19	±0.25	±0.32	±0.43	±0.57	±0.72	±0.88	±1.05	±1.25	0.5	0.025	0.06	0.12	0.4

BRCONNECTORS

PCB Spring Terminal Block

PROJECTON		Allgemeintoleranz ISO 2768-m
DATE	13.03.2018	Customer Drawing- No.:
DRAWN	AT	Drawing- No.: 2161795
CHECKED	MR	
APPROVED	BR	UNIT: mm / SCALE: / SIZE: A4

Diese Zeichnung ist ausdrücklich Eigentum der BR-connectors GmbH. Ohne vorherige Zustimmung seitens der BR-connectors GmbH darf diese nicht vervielfältigt, noch an Dritte zugänglich gemacht werden.
Wir behalten uns alle Rechte vor, auch im Falle einer Patentierung nach Gebrauchsmusterprüfung.